FLANGE ED ANELLI
FLANGE AND THEIR JOINT

EN 1092-1 : 2013

Завод металлоконструкций - https://www.center-mts.ru

FLANGE PIANE PN 6

EN 1092-1 : 2013

PLATE FLANGES PN 6

TYPE 01/A PN 6

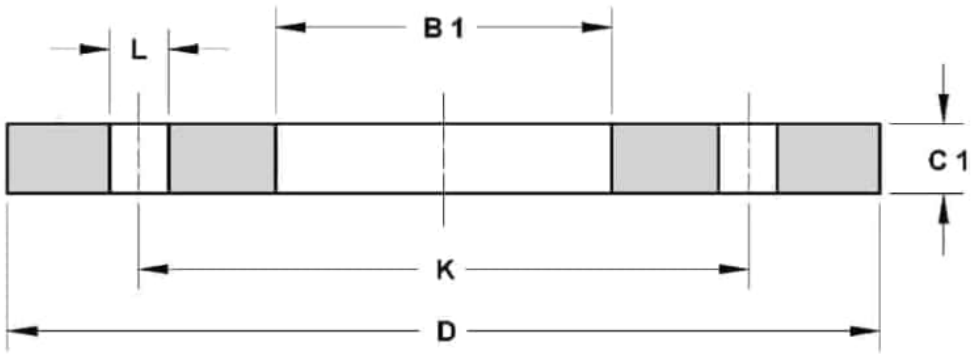

Dimensions in mm.

Cod.	DN	D	K	FORI / BOLTING			B1	C1	Kg.
				L	N°	SIZE			
FI22760010	10	75	50	11	4	M10	18.0	12	0.36
FI22760015	15	80	55	11	4	M10	22.0	12	0.41
FI22760020	20	90	65	11	4	M10	27.5	14	0.60
FI22760025	25	100	75	11	4	M10	34.5	14	0.74
FI22760032	32	120	90	14	4	M12	43.5	16	1.19
FI22760040	40	130	100	14	4	M12	49.5	16	1.39
FI22760050	50	140	110	14	4	M12	61.5	16	1.53
FI22760065	65	160	130	14	4	M12	77.5	16	1.89
FI22760080	80	190	150	18	4	M16	90.5	18	2.98
FI22760100	100	210	170	18	4	M16	116.0	18	3.46
FI22760125	125	240	200	18	8	M16	141.5	20	4.60
FI22760150	150	265	225	18	8	M16	170.5	20	5.22
FI22760200	200	320	280	18	8	M16	221.5	22	7.15
FI22760250	250	375	335	18	12	M16	276.5	24	9.61
FI22760300	300	440	395	22	12	M20	327.5	24	12.60
FI22760350	350	490	445	22	12	M20	359.5	26	15.60
FI22760400	400	540	495	22	16	M20	411.0	28	18.40
FI22760450	450	595	550	22	16	M20	462.0	30	21.40
FI22760500	500	645	600	22	20	M20	513.5	30	24.60
FI22760600	600	755	705	26	20	M24	616.5	32	35.00
FI22760700	700	860	810	26	24	M24	714.2	40	48.00
FI22760800	800	975	920	30	24	M27	815.8	44	63.00
FI22760900	900	1075	1020	30	24	M27	917.4	48	74.50
FI22761000	1000	1175	1120	30	28	M27	1019.0	52	82.00

Завод металлоконструкций - https://www.center-mts.ru

FLANGE PIANE PN 10

EN 1092-1 : 2013

PLATE FLANGES PN 10

TYPE 01/A PN 10

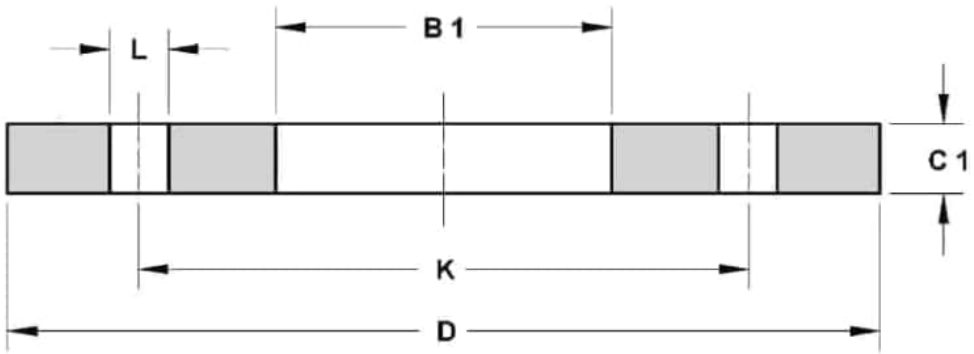

Dimensions in mm.

Cod.	DN	D	K	FORI / BOLTING			B1	C1	Kg.
				L	N°	SIZE			
FI22770200	200	340	295	22	8	M20	221.5	24	9.31
FI22770250	250	395	350	22	12	M20	276.5	26	11.90
FI22770300	300	445	400	22	12	M20	327.5	26	13.80
FI22770350	350	505	460	22	16	M20	359.5	30	19.00
FI22770400	400	565	515	26	16	M24	411.0	32	25.90
FI22770450	450	615	565	26	20	M24	462.0	36	33.50
FI22770500	500	670	620	26	20	M24	513.5	38	41.10
FI22770600	600	780	725	30	20	M27	616.5	42	54.50
FI22770700	700	895	840	30	24	M27	714.2	50	65.00
FI22770800	800	1015	950	33	24	M30	815.8	56	88.00
FI22770900	900	1115	1050	33	28	M30	917.4	62	100.00
FI22771000	1000	1230	1160	36	28	M33	1019.0	70	128.00

Завод металлоконструкций - https://www.center-mts.ru

FLANGE PIANE PN 16

EN 1092-1 : 2013

PLATE FLANGES PN 16

TYPE 01/A PN 16

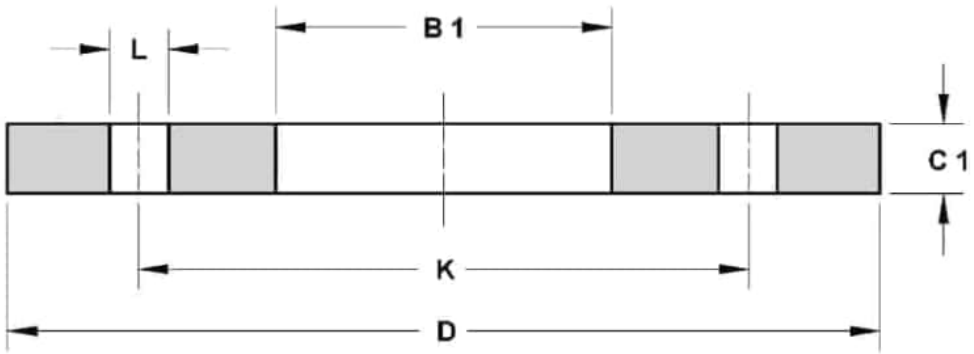

Dimensions in mm.

Cod.	DN	D	K	FORI / BOLTING			B1	C1	Kg.
				L	N°	SIZE			
FI22780050	50	165	125	18	4	M16	61.5	20	2.50
FI22780065	65	185	145	18	4	M16	77.5	20	3.00
FU22780065	65	185	145	18	8	M16	77.5	20	3.00
FI22780080	80	200	160	18	8	M16	90.5	20	3.50
FI22780100	100	220	180	18	8	M16	116.0	22	4.40
FI22780125	125	250	210	18	8	M16	141.5	22	5.50
FI22780150	150	285	240	22	8	M20	170.5	24	7.00
FI22780200	200	340	295	22	12	M20	221.5	26	9.50
FI22780250	250	405	355	26	12	M24	276.5	29	14.00
FI22780300	300	460	410	26	12	M24	327.5	32	19.00
FI22780350	350	520	470	26	16	M24	359.5	35	28.00
FI22780400	400	580	525	30	16	M27	411.0	38	36.00
FI22780450	450	640	585	30	20	M27	462.0	42	46.00
FI22780500	500	715	650	33	20	M30	513.5	46	64.00
FI22780600	600	840	770	36	20	M33	616.5	55	96.00
FI22780700	700	910	840	36	24	M33	714.2	63	88.00
FI22780800	800	1025	950	39	24	M36	815.8	74	115.00
FI22780900	900	1125	1050	39	28	M36	917.4	82	125.00
FI22781000	1000	1255	1170	42	28	M39	1019.0	90	160.00

Завод металлоконструкций - https://www.center-mts.ru

FLANGE PIANE PN 25

EN 1092-1 : 2013

PLATE FLANGES PN 25

TYPE 01/A PN 25

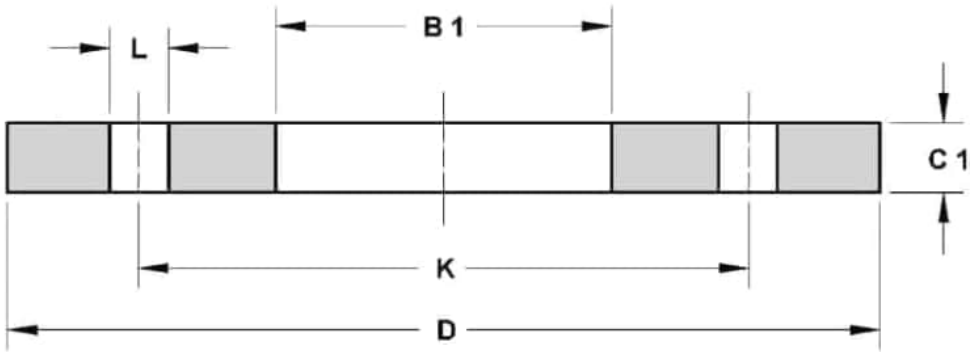

Dimensions in mm.

Cod.	DN	D	K	FORI / BOLTING			B1	C1	Kg.
				L	N°	SIZE			
FI60830200	200	360	310	26	12	M24	221.5	32	14.50
FI60830250	250	425	370	30	12	M27	276.5	35	20.00
FI60830300	300	485	430	30	16	M27	327.5	38	26.50
FI60830350	350	555	490	33	16	M30	359.5	42	42.00
FI60830400	400	620	550	36	16	M33	411.0	48	55.00
FI60830450	450	670	600	36	20	M33	462.0	54	64.50
FI60830500	500	730	660	36	20	M33	513.5	58	84.00
FI60830600	600	845	770	39	20	M36	616.5	68	127.50

Завод металлоконструкций - https://www.center-mts.ru

FLANGE PIANE PN 40

EN 1092-1 : 2013

PLATE FLANGES PN 40

TYPE 01/A PN 40

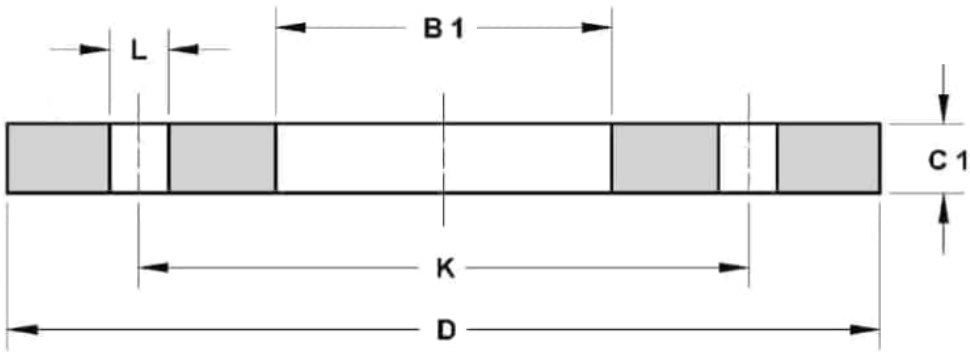

Dimensions in mm.
**Values used unless otherwise specified by purchaser*

Cod.	DN	D	K	FORI / BOLTING			B1	C1	Kg.
				L	N°	SIZE			
FI60840010	10	90	60	14	4	M12	18.0	14	0.60
FI60840015	15	95	65	14	4	M12	22.0	14	0.67
FI60840020	20	105	75	14	4	M12	27.5	16	0.94
FI60840025	25	115	85	14	4	M12	34.5	16	1.00
FI60840032	32	140	100	18	4	M16	43.5	18	1.83
FI60840040	40	150	110	18	4	M16	49.5	18	2.00
FI60840050	50	165	125	18	4	M16	61.5	20	2.50
FI60840065	65	185	145	18	8	M16	77.5	22	3.50
FI60840080	80	200	160	18	8	M16	90.5	24	4.50
FI60840100	100	235	190	22	8	M20	116.0	26	6.00
FI60840125	125	270	220	26	8	M24	141.5	28	8.00
FI60840150	150	300	250	26	8	M24	170.5	30	10.30
FI60840200	200	375	320	30	12	M27	221.5	36	18.00
FI60840250	250	450	385	33	12	M30	276.5	42	29.50
FI60840300	300	515	450	33	16	M30	327.5	52	41.50
FI60840350	350	580	510	36	16	M33	359.5	58	62.00
FI60840400	400	660	585	39	16	M36	411.0	65	89.50
FI60840450	450	685	610	39	20	M36	462.0	*66**	91.50
FI60840500	500	755	670	42	20	M39	513.5	*72**	120.00
FI60840600	600	890	795	48	20	M45	616.5	*84**	189.00

Завод металлоконструкций - https://www.center-mts.ru

FLANGE PIANE PN 63

EN 1092-1 : 2013

PLATE FLANGES PN 63

TYPE 01/A PN 63

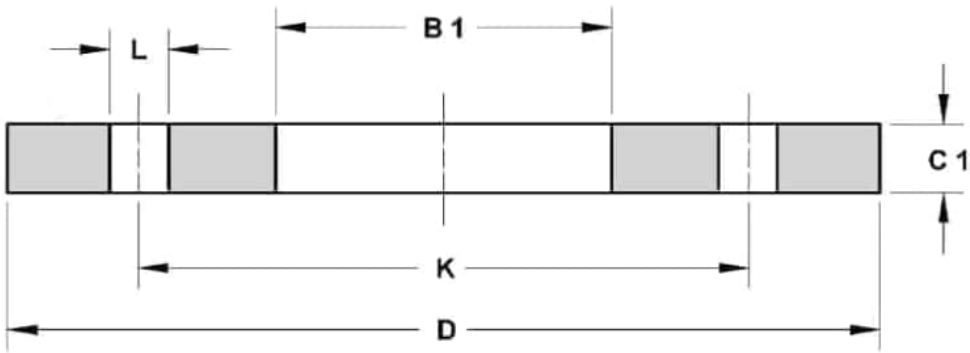

Dimensions in mm.

Cod.	DN	D	K	FORI / BOLTING			B1	C1	Kg.
				L	N°	SIZE			
	50	180	135	22	4	M20	61.5	26	4.50
	65	205	160	22	8	M20	77.5	26	5.00
	80	215	170	22	8	M20	90.5	30	6.50
	100	250	200	26	8	M24	116.0	32	8.50
	125	295	240	30	8	M27	141.5	34	12.50
	150	345	280	33	8	M30	170.5	36	18.00
	200	415	345	36	12	M33	221.5	48	30.50
	250	470	400	36	12	M33	276.5	55	43.00
	300	530	460	36	16	M33	327.5	65	58.50
	350	600	525	39	16	M36	359.5	72	91.50
	400	670	585	42	16	M39	411.0	80	121.00
	450								
	500	800	705	48	20	M45			
	600	930	820	56	20	M52			

Завод металлоконструкций - https://www.center-mts.ru

FLANGE PIANE PN 100

EN 1092-1 : 2013

PLATE FLANGES PN 100

TYPE 01/A PN 100

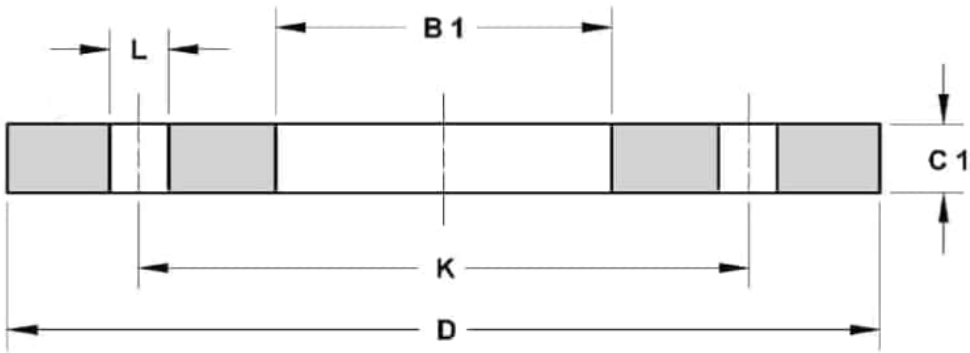

Dimensions in mm.
**Values used unless otherwise specified by purchaser*

Cod.	DN	D	K	FORI / BOLTING			B1	C1	Kg.
				L	N°	SIZE			
	10	100	70	14	4	M12	18.0	20	1.00
	15	105	75	14	4	M12	22.0	20	1.00
	20	130	90	18	4	M16	27.5	22	2.00
	25	140	100	18	4	M16	34.5	24	2.50
	32	155	110	22	4	M20	43.5	24	3.00
	40	170	125	22	4	M20	49.5	26	4.00
	50	195	145	26	4	M24	61.5	28	5.50
	65	220	170	26	8	M24	77.5	30	7.00
	80	230	180	26	8	M24	90.5	34	8.00
	100	265	210	30	8	M27	116.0	36	11.00
	125	315	250	33	8	M30	141.5	42	18.50
	150	355	290	33	12	M30	170.5	48	25.00
	200	430	360	36	12	M33	221.5	60	44.50
	250	505	430	39	12	M36	276.5	72	71.00
	300	585	500	42	16	M39	327.5	84	107.00
	350	655	560	48	16	M45	359.5	95	154.00
	400	715	620	48	16	M45	411.0	*106**	199.50
	450								
	500	870	760	56	20	M52	513.5	*128**	399.50

Завод металлоконструкций - https://www.center-mts.ru

FLANGE LIBERE PN 6

LOOSE PLATE FLANGES PN 6

EN 1092-1 : 2013

TYPE 02/A PN 6

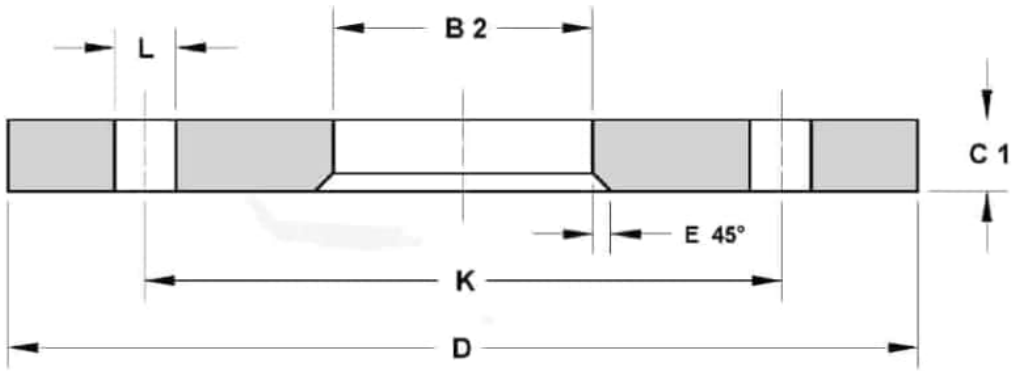

Dimensions in mm.

Cod.	DN	D	K	FORI / BOLTING			B2	C1	E	Kg.
				L	N°	SIZE				
FI60880010	10	75	50	11	4	M10	21	12	3	0.36
FI60880015	15	80	55	11	4	M10	25	12	3	0.41
FI60880020	20	90	65	11	4	M10	31	14	4	0.60
FI60880025	25	100	75	11	4	M10	38	14	4	0.74
FI60880032	32	120	90	14	4	M12	46	16	5	1.19
FI60880040	40	130	100	14	4	M12	53	16	5	1.39
FI60880050	50	140	110	14	4	M12	65	16	5	1.53
FI60880065	65	160	130	14	4	M12	81	16	6	1.89
FI60880080	80	190	150	18	4	M16	94	18	6	2.98
FI60880100	100	210	170	18	4	M16	120	18	6	3.46
FI60880125	125	240	200	18	8	M16	145	20	6	4.60
FI60880150	150	265	225	18	8	M16	174	20	6	5.22
FI60880200	200	320	280	18	8	M16	226	22	6	7.15
FI60880250	250	375	335	18	12	M16	281	24	8	9.61
FI60880300	300	440	395	22	12	M20	333	24	8	12.60
FI60880350	350	490	445	22	12	M20	365	26	8	15.60
FI60880400	400	540	495	22	16	M20	416	28	8	18.40
FI60880450	450	595	550	22	16	M20	467	30	8	21.40
FI60880500	500	645	600	22	20	M20	519	30	8	24.60
FI60880600	600	755	705	26	20	M24	622	32	8	35.00
FI60880700	700	860	810	26	24	M24	721	40	4	48.00
FI60880800	800	975	920	30	24	M27	824	44	4	63.00
FI60880900	900	1075	1020	30	24	M27	926	48	4	74.50
FI60881000	1000	1175	1120	30	28	M27	1028	52	4	82.00

Завод металлоконструкций - https://www.center-mts.ru

FLANGE LIBERE PN 10

LOOSE PLATE FLANGES PN 10

EN 1092-1 : 2013

TYPE 02/A PN 10

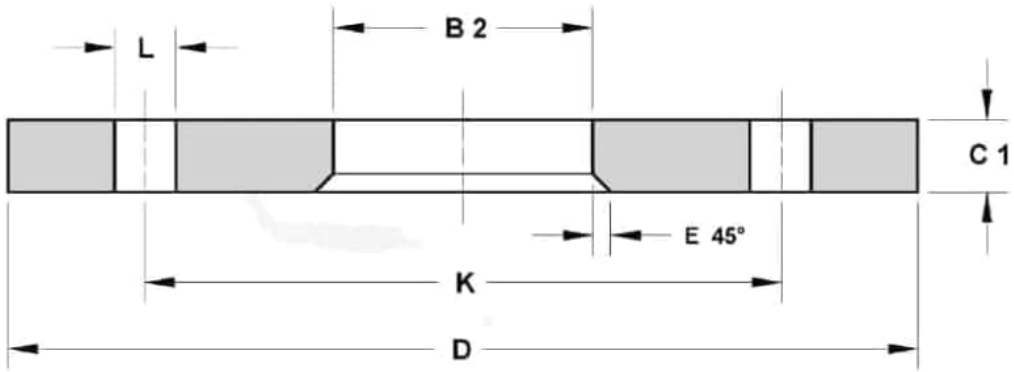

Dimensions in mm.

Cod.	DN	D	K	FORI / BOLTING			B2	C1	E	Kg.
				L	N°	SIZE				
FI60890200	200	340	295	22	8	M20	226	24	6	9.31
FI60890250	250	395	350	22	12	M20	281	26	8	11.90
FI60890300	300	445	400	22	12	M20	333	26	8	13.80
FI60890350	350	505	460	22	16	M20	365	30	8	19.00
FI60890400	400	565	515	26	16	M24	416	32	8	25.90
FI60890450	450	615	565	26	20	M24	467	36	8	33.50
FI60890500	500	670	620	26	20	M24	519	38	8	41.10
FI60890600	600	780	725	30	20	M27	622	42	8	54.50
FI60890700	700	895	840	30	24	M27	721	50	8	65.00
FI60890800	800	1015	950	33	24	M30	824	56	8	90.00
FI60890900	900	1115	1050	33	28	M30	926	62	8	100.00
FI60891000	1000	1230	1160	36	28	M33	1028	70	8	130.00

Завод металлоконструкций - https://www.center-mts.ru

FLANGE LIBERE PN 16

LOOSE PLATE FLANGES PN 16

EN 1092-1 : 2013

TYPE 02/A PN 16

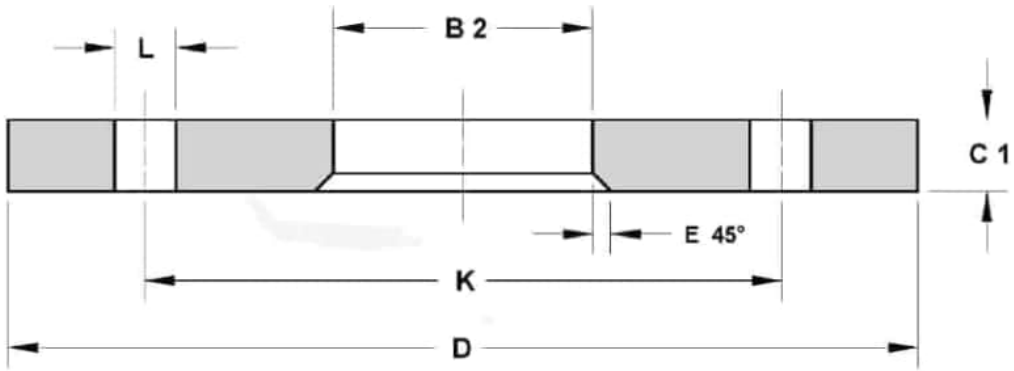

Dimensions in mm.

Cod.	DN	D	K	FORI / BOLTING			B2	C1	E	Kg.
				L	N°	SIZE				
FI60900050	50	165	125	18	4	M16	65	20	5	2.50
FI60900065	65	185	145	18	4	M16	81	20	6	3.00
FU60900065	65	185	145	18	8	M16	81	20	6	3.00
FI60900080	80	200	160	18	8	M16	94	20	6	3.50
FI60900100	100	220	180	18	8	M16	120	22	6	4.40
FI60900125	125	250	210	18	8	M16	145	22	6	5.50
FI60900150	150	285	240	22	8	M20	174	24	6	7.00
FI60900200	200	340	295	22	12	M20	226	26	6	9.50
FI60900250	250	405	355	26	12	M24	281	29	8	14.00
FI60900300	300	460	410	26	12	M24	333	32	8	19.00
FI60900350	350	520	470	26	16	M24	365	35	8	28.00
FI60900400	400	580	525	30	16	M27	416	38	8	36.00
FI60900450	450	640	585	30	20	M27	467	42	8	46.00
FI60900500	500	715	650	33	20	M30	519	46	8	64.00
FI60900600	600	840	770	36	20	M33	622	55	8	96.00
FI60900700	700	910	840	36	24	M33	721	63	8	88.00
FI60900800	800	1025	950	39	24	M36	824	74	8	115.00
FI60900900	900	1125	1050	39	28	M36	926	82	8	125.00
FI60901000	1000	1255	1170	42	28	M39	1030	90	8	160.00

Завод металлоконструкций - https://www.center-mts.ru

FLANGE LIBERE PN 25

LOOSE PLATE FLANGES PN 25

EN 1092-1 : 2013

TYPE 02/A PN 25

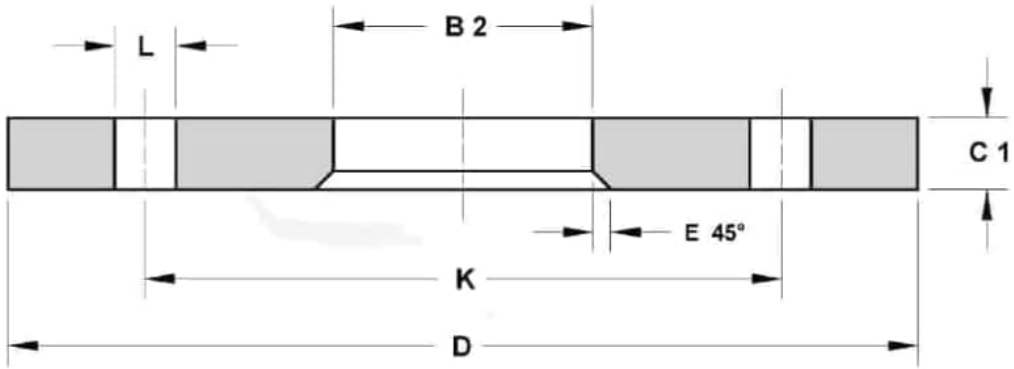

Dimensions in mm.

Cod.	DN	D	K	FORI / BOLTING			B2	C1	E	Kg.
				L	N°	SIZE				
FI22990200	200	360	310	26	12	M24	226	32	6	14.50
FI22990250	250	425	370	30	12	M27	281	35	8	20.00
FI22990300	300	485	430	30	16	M27	333	38	8	26.50
FI22990350	350	555	490	33	16	M30	365	42	8	42.00
FI22990400	400	620	550	36	16	M33	416	48	8	55.00
FI22990450	450	670	600	36	20	M33	467	54	8	64.50
FI22990500	500	730	660	36	20	M33	519	58	8	84.00
FI22990600	600	845	770	39	20	M36	622	68	8	127.50
FI22990700	700	960	875	42	24	M39	721	85	8	
FI22990800	800	1085	990	48	24	M45	824	95	8	
FI22990900	900	1185	1090	48	28	M45				
FI22991000	1000	1320	1210	56	28	M52				

Завод металлоконструкций - https://www.center-mts.ru

FLANGE LIBERE PN 40

LOOSE PLATE FLANGES PN 40

EN 1092-1 : 2013

TYPE 02/A PN 40

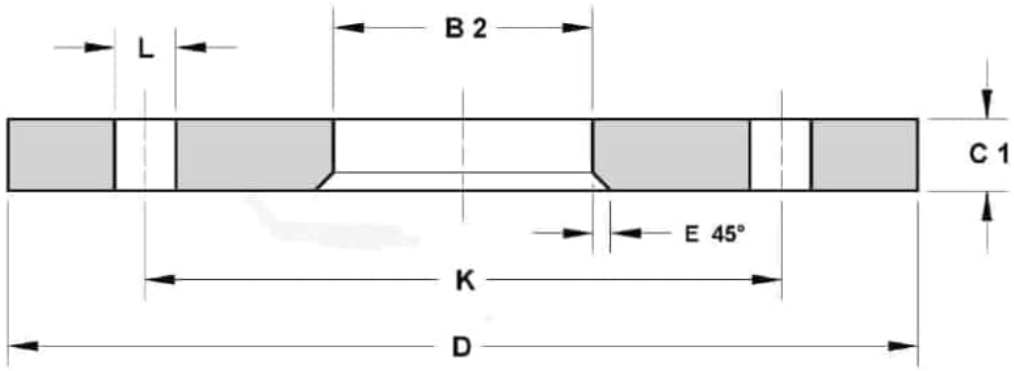

Dimensions in mm.
**Values used unless otherwise specified by purchaser*

Cod.	DN	D	K	FORI / BOLTING			B2	C1	E	Kg.
				L	N°	SIZE				
FI23000010	10	90	60	14	4	M12	21	14	3	0.60
FI23000015	15	95	65	14	4	M12	25	14	3	0.67
FI23000020	20	105	75	14	4	M12	31	16	4	0.94
FI23000025	25	115	85	14	4	M12	38	16	4	1.00
FI23000032	32	140	100	18	4	M16	47	18	5	1.83
FI23000040	40	150	110	18	4	M16	53	18	5	2.00
FI23000050	50	165	125	18	4	M16	65	20	5	2.50
FI23000065	65	185	145	18	8	M16	81	22	6	3.50
FI23000080	80	200	160	18	8	M16	94	24	6	4.50
FI23000100	100	235	190	22	8	M20	120	26	6	6.00
FI23000125	125	270	220	26	8	M24	145	28	6	8.00
FI23000150	150	300	250	26	8	M24	174	30	6	10.30
FI23000200	200	375	320	30	12	M27	226	36	6	18.00
FI23000250	250	450	385	33	12	M30	281	42	8	29.50
FI23000300	300	515	450	33	16	M30	333	52	8	41.50
FI23000350	350	580	510	36	16	M33	365	58	8	62.00
FI23000400	400	660	585	39	16	M36	416	65	8	89.50
FI23000450	450	685	610	39	20	M36	467	*66**	8	91.50
FI23000500	500	755	670	42	20	M39	519	*72**	8	120.00
FI23000600	600	890	795	48	20	M45	622	*84**	8	189.00

Завод металлоконструкций - https://www.center-mts.ru

FLANGE CIECHE PN 6

EN 1092-1 : 2013

BLANK FLANGES PN 6

TYPE 05/A PN 6

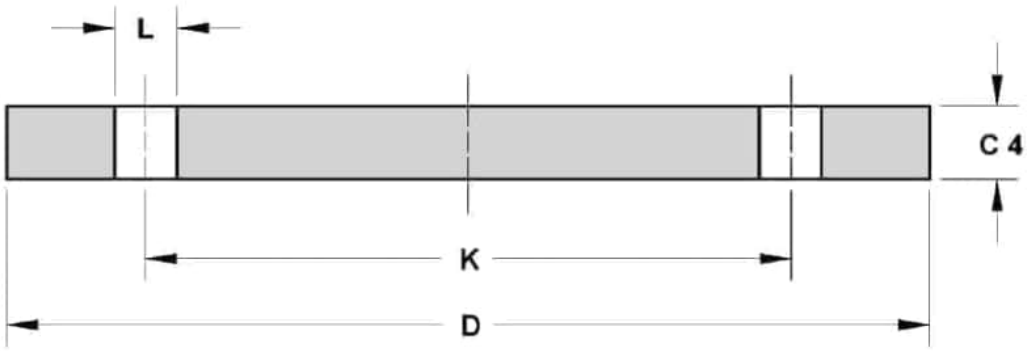

Dimensions in mm.

Cod.	DN	D	K	FORI / BOLTING			C4	Kg.
				L	N°	SIZE		
FI60910010	10	75	50	11	4	M10	12	0.38
FI60910015	15	80	55	11	4	M10	12	0.44
FI60910020	20	90	65	11	4	M10	14	0.65
FI60910025	25	100	75	11	4	M10	14	0.82
FI60910032	32	120	90	14	4	M12	14	1.17
FI60910040	40	130	100	14	4	M12	14	1.39
FI60910050	50	140	110	14	4	M12	14	1.62
FI60910065	65	160	130	14	4	M12	14	2.14
FI60910080	80	190	150	18	4	M16	16	3.43
FI60910100	100	210	170	18	4	M16	16	4.22
FI60910125	125	240	200	18	8	M16	18	6.11
FI60910150	150	265	225	18	8	M16	18	7.51
FI60910200	200	320	280	18	8	M16	20	12.30
FI60910250	250	375	335	18	12	M16	22	18.50
FI60910300	300	440	395	22	12	M20	22	25.50
FI60910350	350	490	445	22	12	M20	22	31.80
FI60910400	400	540	495	22	16	M20	22	38.50
FI60910450	450	595	550	22	16	M20	24	47.00
FI60910500	500	645	600	22	20	M20	24	60.40
FI60910600	600	755	705	26	20	M24	30	103.00
FI60910700	700	860	810	26	24	M24	40	178.50
FI60910800	800	975	920	30	24	M27	44	252.00
FI60910900	900	1075	1020	30	24	M27	48	335.50
FI60911000	1000	1175	1120	30	28	M27	52	434.50

Завод металлоконструкций - https://www.center-mts.ru

FLANGE CIECHE PN 10

BLANK FLANGES PN 10

EN 1092-1 : 2013

TYPE 05/A PN 10

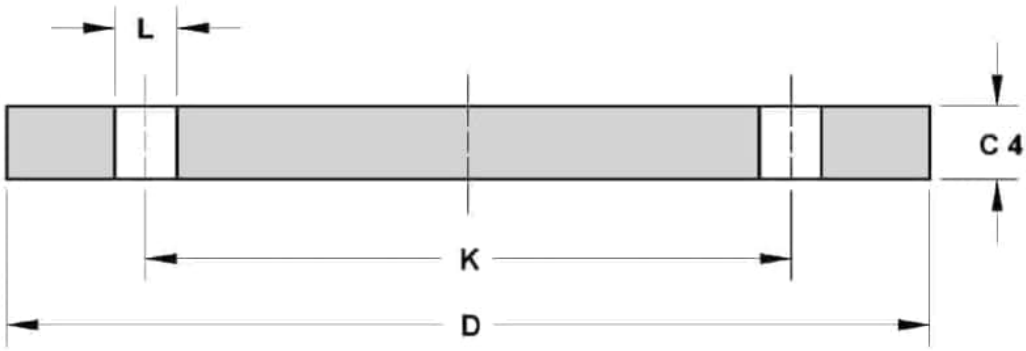

Dimensions in mm.

Cod.	DN	D	K	FORI / BOLTING			C4	Kg.
				L	N°	SIZE		
FI60920200	200	340	295	22	8	M20	24	16.50
FI60920250	250	395	350	22	12	M20	26	24.10
FI60920300	300	445	400	22	12	M20	26	30.80
FI60920350	350	505	460	22	16	M20	26	39.60
FI60920400	400	565	515	26	16	M24	26	49.40
FI60920450	450	615	565	26	20	M24	28	58.60
FI60920500	500	670	620	26	20	M24	28	75.00
FI60920600	600	780	725	30	20	M27	34	124.00
FI60920700	700	895	840	30	24	M27	38	182.50
FI60920800	800	1015	950	33	24	M30	48	260.00
FI60920900	900	1115	1050	33	28	M30	50	344.00
FI60921000	1000	1230	1160	36	28	M33	54	473.50

Завод металлоконструкций - https://www.center-mts.ru

FLANGE CIECHE PN 16

BLANK FLANGES PN 16

EN 1092-1 : 2013

TYPE 05/A PN 16

Dimensions in mm.

Cod.	DN	D	K	FORI / BOLTING			C4	Kg.
				L	N°	SIZE		
FI60930050	50	165	125	18	4	M16	18	2.87
FI60930065	65	185	145	18	4	M16	18	3.65
FU60930065	65	185	145	18	8	M16	18	3.65
FI60930080	80	200	160	18	8	M16	20	4.61
FI60930100	100	220	180	18	8	M16	20	5.65
FI60930125	125	250	210	18	8	M16	22	8.12
FI60930150	150	285	240	22	8	M20	22	10.50
FI60930200	200	340	295	22	12	M20	24	16.20
FI60930250	250	405	355	26	12	M24	26	25.10
FI60930300	300	460	410	26	12	M24	28	35.20
FI60930350	350	520	470	26	16	M24	30	48.20
FI60930400	400	580	525	30	16	M27	32	63.50
FI60930450	450	640	585	30	20	M27	40	96.50
FI60930500	500	715	650	33	20	M30	44	133.00
FI60930600	600	840	770	36	20	M33	54	226.50
FI60930700	700	910	840	36	24	M33	58	236.00
FI60930800	800	1025	950	39	24	M36	62	325.00
FI60930900	900	1125	1050	39	28	M36	64	437.50
FI60931000	1000	1255	1170	42	28	M39	68	602.00

Завод металлоконструкций - https://www.center-mts.ru

FLANGE CIECHE PN 25

BLANK FLANGES PN 25

EN 1092-1 : 2013

TYPE 05/A PN 25

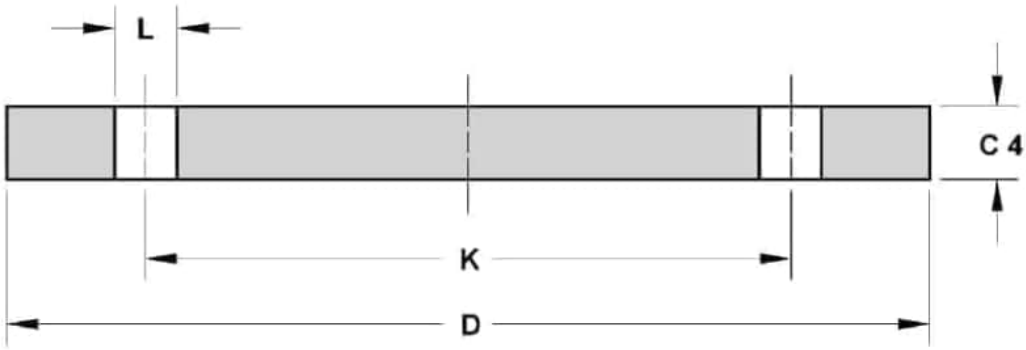

Dimensions in mm.

Cod.	DN	D	K	FORI / BOLTING			C4	Kg.
				L	N°	SIZE		
FI60940200	200	360	310	26	12	M24	30	22.60
FI60940250	250	425	370	30	12	M27	32	33.50
FI60940300	300	485	430	30	16	M27	34	46.30
FI60940350	350	555	490	33	16	M30	38	68.10
FI60940400	400	620	550	36	16	M33	40	89.70
FI60940450	450	670	600	36	20	M33	50	120.00
FI60940500	500	730	660	36	20	M33	51	150.00
FI60940600	600	845	770	39	20	M36	66	244.50

Завод металлоконструкций - https://www.center-mts.ru

FLANGE CIECHE PN 40

EN 1092-1 : 2013

BLANK FLANGES PN 40

TYPE 05/A PN 40

Dimensions mm.

Cod.	DN	D	K	FORI / BOLTING			C4	Kg.
				L	N°	SIZE		
FI60950010	10	90	60	14	4	M12	16	0.72
FI60950015	15	95	65	14	4	M12	16	0.81
FI60950020	20	105	75	14	4	M12	18	1.14
FI60950025	25	115	85	14	4	M12	18	1.38
FI60950032	32	140	100	18	4	M16	18	2.03
FI60950040	40	150	110	18	4	M16	18	2.35
FI60950050	50	165	125	18	4	M16	20	3.20
FI60950065	65	185	145	18	8	M16	22	4.29
FI60950080	80	200	160	18	8	M16	24	5.53
FI60950100	100	235	190	22	8	M20	24	7.59
FI60950125	125	270	220	26	8	M24	26	10.80
FI60950150	150	300	250	26	8	M24	28	14.70
FI60950200	200	375	320	30	12	M27	36	27.20
FI60950250	250	450	385	33	12	M30	38	44.40
FI60950300	300	515	450	33	16	M30	42	64.20
FI60950350	350	580	510	36	16	M33	46	89.50
FI60950400	400	660	585	39	16	M36	50	127.00
FI60950450	450	685	610	39	20	M36	57	154.00
FI60950500	500	755	670	42	20	M39	57	188.00
FI60950600	600	890	795	48	20	M45	72	331.00

Завод металлоконструкций - https://www.center-mts.ru

FLANGE CIECHE PN 63

EN 1092-1 : 2013

BLANK FLANGES PN 63

TYPE 05/A PN 63

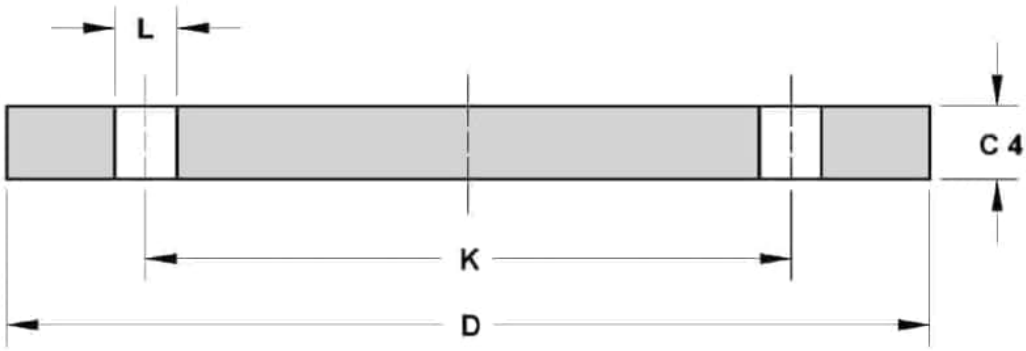

Dimensions in mm.

Cod.	DN	D	K	FORI / BOLTING			C4	Kg.
				L	N°	SIZE		
FI60960050	50	180	135	22	4	M20	26	5.00
FI60960065	65	205	160	22	8	M20	26	6.00
FI60960080	80	215	170	22	8	M20	28	7.50
FI60960100	100	250	200	26	8	M24	30	10.50
FI60960125	125	295	240	30	8	M27	34	16.50
FI60960150	150	345	280	33	8	M30	36	24.50
FI60960200	200	415	345	36	12	M33	42	40.50
FI60960250	250	470	400	36	12	M33	46	58.00
FI60960300	300	530	460	36	16	M33	52	83.50
FI60960350	350	600	525	39	16	M36	56	116.00
FI60960400	400	670	585	42	16	M39	60	155.50
FI60960450	450							
FI60960500	500	800	705	48	20	M45		
FI60960600	600	930	820	56	20	M52		

Завод металлоконструкций - https://www.center-mts.ru

FLANGE CIECHE PN 100

EN 1092-1 : 2013

BLANK FLANGES PN 100

TYPE 05/A PN 100

Dimensions in mm.

Cod.	DN	D	K	FORI / BOLTING			C4	Kg.
				L	N°	SIZE		
FI60970010	10	100	70	14	4	M12	20	1.00
FI60970015	15	105	75	14	4	M12	20	1.50
FI60970020	20	130	90	18	4	M16	22	2.00
FI60970025	25	140	100	18	4	M16	24	2.50
FI60970032	32	155	110	22	4	M20	24	3.50
FI60970040	40	170	125	22	4	M20	26	4.50
FI60970050	50	195	145	26	4	M24	28	6.00
FI60970065	65	220	170	26	8	M24	30	8.00
FI60970080	80	230	180	26	8	M24	32	9.50
FI60970100	100	265	210	30	8	M27	36	14.00
FI60970125	125	315	250	33	8	M30	40	22.50
FI60970150	150	355	290	33	12	M30	44	30.50
FI60970200	200	430	360	36	12	M33	52	54.50
FI60970250	250	505	430	39	12	M36	60	87.50
FI60970300	300	585	500	42	16	M39	68	131.50
FI60970350	350	655	560	48	16	M45	74	179.00
FI60970400	400	715	620	48	16	M45		
FI60970450	450							
FI60970500	500	870	760	56	20	M52		

Завод металлоконструкций - https://www.center-mts.ru

FLANGE A COLLARE PN 6

EN 1092-1 : 2013

WELD-NECK FLANGES PN 6

TYPE 11/B1 PN 6

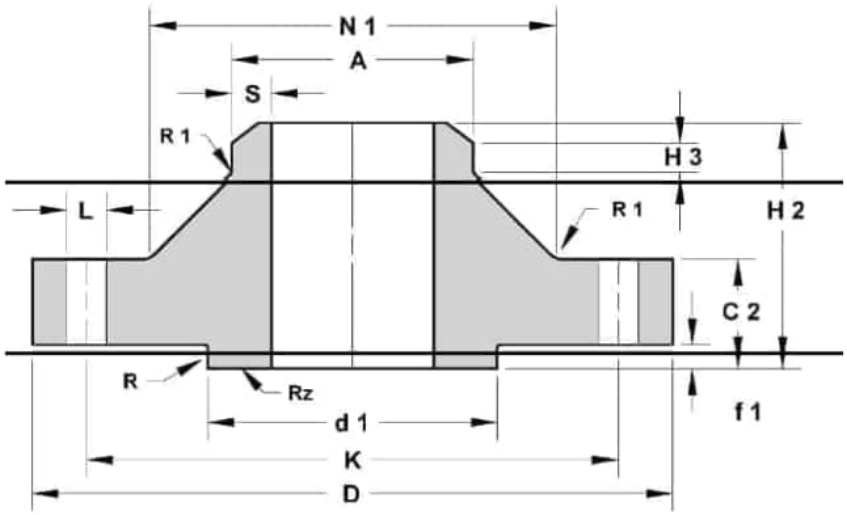

Dimensions in mm.

Cod.	DN	D	K	FORI / BOLTING			A	C2	H2	H3	N1	R1	S	d1	f1	R	Kg.
				L	N°	SIZE											
FI22800010	10	75	50	11	4	M10	17.2	12	28	6	26	4	2.0	35	2	2.5	0.33
FI22800015	15	80	55	11	4	M10	21.3	12	30	6	30	4	2.0	40	2	2.5	0.39
FI22800020	20	90	65	11	4	M10	26.9	14	32	6	38	4	2.3	50	2	2.5	0.59
FI22800025	25	100	75	11	4	M10	33.7	14	35	6	42	4	2.6	60	2	2.5	0.74
FI22800032	32	120	90	14	4	M12	42.4	14	35	6	55	6	2.6	70	2	2.5	1.00
FI22800040	40	130	100	14	4	M12	48.3	14	38	7	62	6	2.6	80	2	2.5	1.18
FI22800050	50	140	110	14	4	M12	60.3	14	38	8	74	6	2.9	90	2	2.5	1.34
FI22800065	65	160	130	14	4	M12	76.1	14	38	9	88	6	2.9	110	2	2.5	1.67
FI22800080	80	190	150	18	4	M16	88.9	16	42	10	102	8	3.2	128	2	2.5	2.71
FI22800100	100	210	170	18	4	M16	114.3	16	45	10	130	8	3.6	148	2	3.0	3.24
FI22800125	125	240	200	18	8	M16	139.7	18	48	10	155	8	4.0	178	2	3.0	4.49
FI22800150	150	265	225	18	8	M16	168.3	18	48	12	184	10	4.5	202	2	3.0	5.15
FI22800200	200	320	280	18	8	M16	219.1	20	55	15	236	10	6.3	258	2	3.0	7.78
FI22800250	250	375	335	18	12	M16	273.0	22	60	15	290	12	6.3	312	2	3.0	10.80
FI22800300	300	440	395	22	12	M20	323.9	22	62	15	342	12	7.1	365	2	3.0	14.00
FI22800350	350	490	445	22	12	M20	355.6	22	62	15	385	12	7.1	415	2	3.5	18.50
FI22800400	400	540	495	22	16	M20	406.4	22	65	15	438	12	7.1	465	2	3.5	21.20
FI22800450	450	595	550	22	16	M20	457.0	22	65	15	492	12	7.1	520	2	3.5	25.00
FI22800500	500	645	600	22	20	M20	508.0	24	68	15	538	12	7.1	570	2	3.5	28.60
FI22800600	600	755	705	26	20	M24	610.0	30	70	16	640	12	7.1	670	2	3.5	43.00
FI22800700	700	860	810	26	24	M24	711.0	30	76	16	740	12	8.0	775	2	3.5	37.40
FI22800800	800	975	920	30	24	M27	813.0	30	76	16	842	12	8.0	880	2	3.5	46.10
FI22800900	900	1075	1020	30	24	M27	914.0	34	78	16	942	12	8.0	980	2	3.5	55.60
FI22801000	1000	1175	1120	30	28	M27	1016.0	38	82	16	1045	16	8.0	1080	2	4.0	61.90

Завод металлоконструкций - https://www.center-mts.ru

FLANGE A COLLARE PN 10

EN 1092-1 : 2013

WELD-NECK FLANGES PN 10

TYPE 11/B1 PN 10

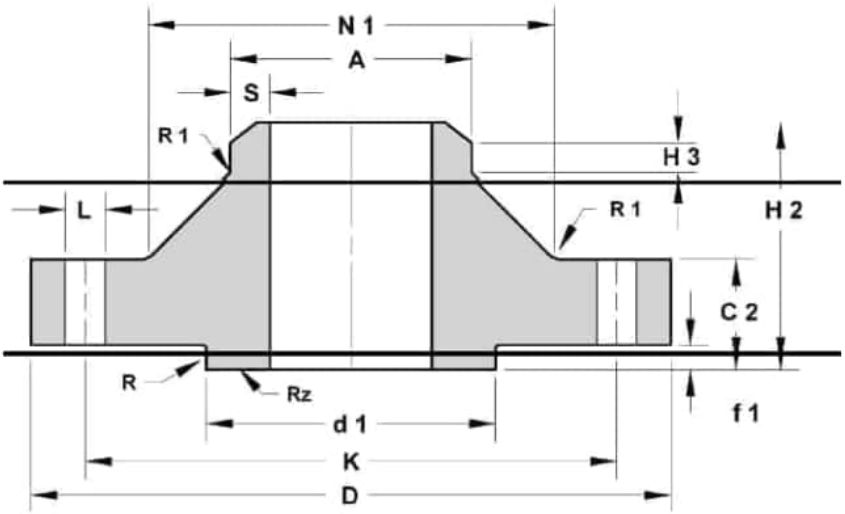

Dimensions mm.

Cod.	DN	D	K	FORI / BOLTING			A	C2	H2	H3	N1	R1	S	d1	f1	R	Kg.
				L	N°	SIZE											
FI22810200	200	340	295	22	8	M20	219.1	24	62	16	234	10	6.3	268	2	3.0	11.30
FI22810250	250	395	350	22	12	M20	273.0	26	68	16	292	12	6.3	320	2	3.0	14.70
FI22810300	300	445	400	22	12	M20	323.9	26	68	16	342	12	7.1	370	2	3.0	17.40
FI22810350	350	505	460	22	16	M20	355.6	26	68	16	385	12	7.1	430	2	3.5	23.60
FI22810400	400	565	515	26	16	M24	406.4	26	72	16	440	12	7.1	482	2	3.5	28.60
FI22810450	450	615	565	26	20	M24	457.0	28	72	16	488	12	7.1	532	2	3.5	34.00
FI22810500	500	670	620	26	20	M24	508.0	28	75	16	542	12	7.1	585	2	3.5	38.10
FI22810600	600	780	725	30	20	M27	610.0	30	82	18	642	12	7.1	685	2	3.5	44.60
FI22810700	700	895	840	30	24	M27	711.0	35	85	18	746	12	8.0	800	2	3.5	62.40
FI22810800	800	1015	950	33	24	M30	813.0	38	96	18	850	12	8.0	905	2	3.5	84.10
FI22810900	900	1115	1050	33	28	M30	914.0	38	99	20	950	12	8.0	1005	2	3.5	98.50
FI22811000	1000	1230	1160	36	28	M33	1016.0	44	105	20	1052	16	8.0	1110	2	4.0	115.00

Завод металлоконструкций - https://www.center-mts.ru

FLANGE A COLLARE PN 16

EN 1092-1 : 2013

WELD-NECK FLANGES PN 16

TYPE 11/B1 PN 16

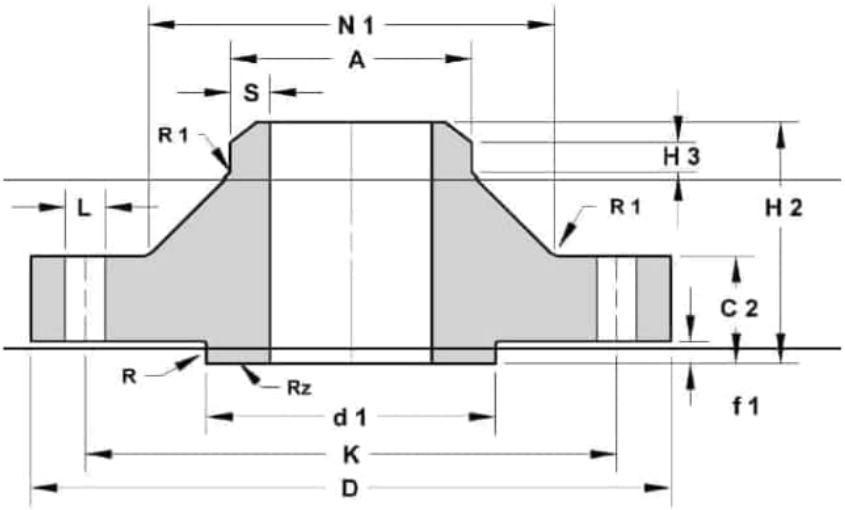

Dimensions in mm.

Cod.	DN	D	K	FORI / BOLTING			A	C2	H2	H3	N1	R1	S	d1	f1	R	Kg.
				L	N°	SIZE											
FI22820050	50	165	125	18	4	M16	60.3	18	45	8	74	6	2.9	102	2	2.5	2.53
FI22820065	65	185	145	18	4	M16	76.1	18	45	10	92	6	2.9	122	2	2.5	3.06
FU22820065	65	185	145	18	8	M16	76.1	18	45	10	92	6	2.9	122	2	2.5	3.06
FI22820080	80	200	160	18	8	M16	88.9	20	50	10	105	6	3.2	138	2	2.5	3.70
FI22820100	100	220	180	18	8	M16	114.3	20	52	12	131	8	3.6	158	2	3.0	4.62
FI22820125	125	250	210	18	8	M16	139.7	22	55	12	156	8	4.0	188	2	3.0	6.30
FI22820150	150	285	240	22	8	M20	168.3	22	55	12	184	10	4.5	212	2	3.0	7.75
FI22820200	200	340	295	22	12	M20	219.1	24	62	16	235	10	6.3	268	2	3.0	11.00
FI22820250	250	405	355	26	12	M24	273.0	26	70	16	292	12	6.3	320	2	3.0	15.60
FI22820300	300	460	410	26	12	M24	323.9	28	78	16	344	12	7.1	378	2	3.0	22.00
FI22820350	350	520	470	26	16	M24	355.6	30	82	16	390	12	7.1	438	2	3.5	31.20
FI22820400	400	580	525	30	16	M27	406.4	32	85	16	445	12	7.1	490	2	3.5	39.30
FI22820450	450	640	585	30	20	M27	457.0	34	83	16	490	12	7.1	550	2	3.5	54.50
FI22820500	500	715	650	33	20	M30	508.0	36	84	16	548	12	7.1	610	2	3.5	74.00
FI22820600	600	840	770	36	20	M33	610.0	40	88	18	670	12	7.1	725	2	3.5	116.50
FI22820700	700	910	840	36	24	M33	711.0	40	104	18	755	12	8.0	795	2	3.5	77.00
FI22820800	800	1025	950	39	24	M36	813.0	41	108	20	855	12	8.0	900	2	3.5	101.00
FI22820900	900	1125	1050	39	28	M36	914.0	48	118	20	955	12	8.0	1000	2	3.5	122.00
FI22821000	1000	1255	1170	42	28	M39	1016.0	59	137	22	1058	16	8.0	1115	2	4.0	162.00

Завод металлоконструкций - https://www.center-mts.ru

FLANGE A COLLARE PN 25

EN 1092-1 : 2013

WELD-NECK FLANGES PN 25

TYPE 11/B1 PN 25

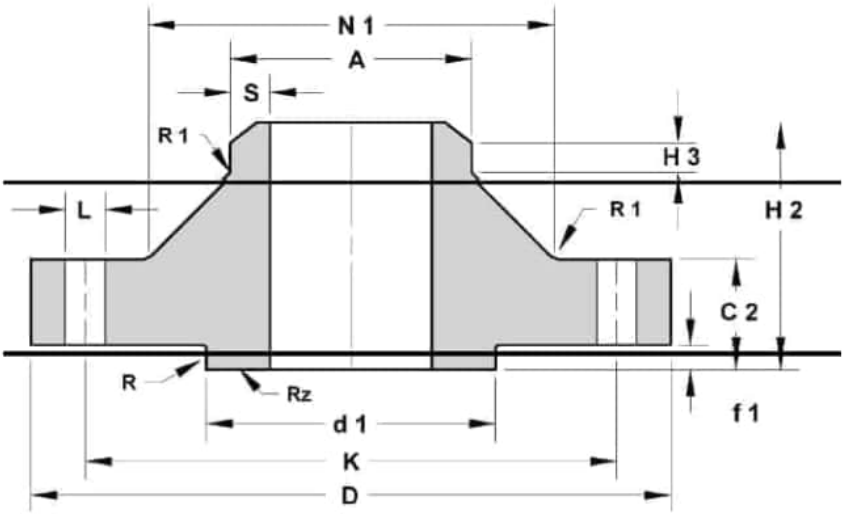

Dimensions in mm.

Cod.	DN	D	K	FORI / BOLTING			A	C2	H2	H3	N1	R1	S	d1	f1	R	Kg.
				L	N°	SIZE											
FI22830200	200	360	310	26	12	M24	219.1	30	80	16	244	10	6.3	278	2	3.0	17.00
FI22830250	250	425	370	30	12	M27	273.0	32	88	18	298	12	7.1	335	2	3.0	24.00
FI22830300	300	485	430	30	16	M27	323.9	34	92	18	352	12	8.0	395	2	3.0	31.20
FI22830350	350	555	490	33	16	M30	355.6	38	100	20	398	12	8.0	450	2	3.5	47.20
FI22830400	400	620	550	36	16	M33	406.4	40	110	20	452	12	8.8	505	2	3.5	61.70
FI22830450	450	670	600	36	20	M33	457.0	46	110	20	500	12	8.8	555	2	3.5	75.50
FI22830500	500	730	660	36	20	M33	508.0	48	125	20	558	12	10.0	615	2	3.5	96.50
FI22830600	600	845	770	39	20	M36	610.0	48	125	20	660	12	12.5	720	2	3.5	138.60
FI22830700	700	960	875	42	24	M39	711.0	50	129	20	760	12	14.2	820	2	3.5	136.00
FI22830800	800	1085	990	48	24	M45	813.0	53	138	22	864	12	16.0	930	2	3.5	186.00
FI22830900	900	1185	1090	48	28	M45	914.0	57	148	24	968	12	17.5	1030	2	3.5	237.00
FI22831000	1000	1320	1210	56	28	M52	1016.0	63	160	24	1070	16	20.0	1140	2	4.0	307.00

Завод металлоконструкций - https://www.center-mts.ru

FLANGE A COLLARE PN 40

EN 1092-1 : 2013

WELD-NECK FLANGES PN 40

TYPE 11/B1 PN 40

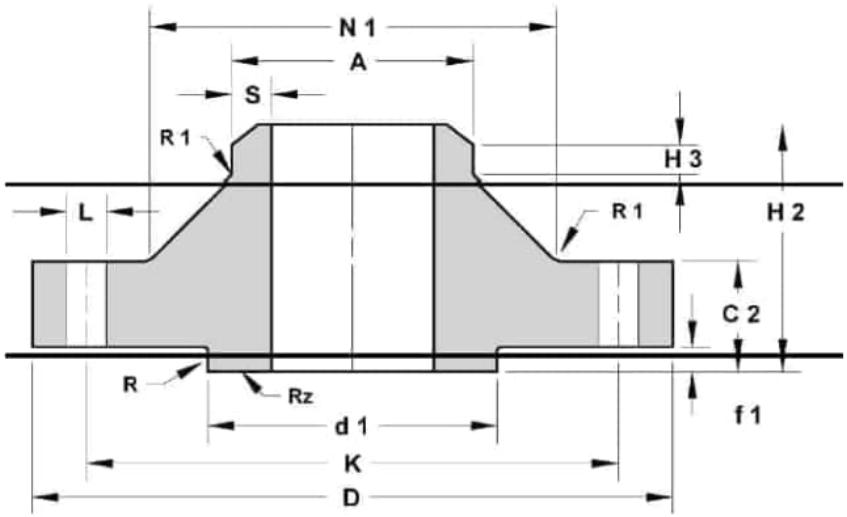

Dimensions in mm.

Cod.	DN	D	K	FORI / BOLTING			A	C2	H2	H3	N1	R1	S	d1	f1	R	Kg.
				L	N°	SIZE											
FI22840010	10	90	60	14	4	M12	17.2	16	35	6	28	4	1.8	40	2	2.5	0.66
FI22840015	15	95	65	14	4	M12	21.3	16	38	6	32	4	2.0	45	2	2.5	0.74
FI22840020	20	105	75	14	4	M12	26.9	18	40	6	40	4	2.3	58	2	2.5	1.00
FI22840025	25	115	85	14	4	M12	33.7	18	40	6	46	4	2.6	68	2	2.5	1.00
FI22840032	32	140	100	18	4	M16	42.4	18	42	6	56	6	2.6	78	2	2.5	1.88
FI22840040	40	150	110	18	4	M16	48.3	18	45	7	64	6	2.6	88	2	2.5	2.00
FI22840050	50	165	125	18	4	M16	60.3	20	48	8	75	6	2.9	102	2	2.5	2.82
FI22840065	65	185	145	18	8	M16	76.1	22	52	10	90	6	2.9	122	2	2.5	3.74
FI22840080	80	200	160	18	8	M16	88.9	24	58	12	105	8	3.2	138	2	2.5	4.75
FI22840100	100	235	190	22	8	M20	114.3	24	65	12	134	8	3.6	162	2	3.0	6.50
FI22840125	125	270	220	26	8	M24	139.7	26	68	12	162	8	4.0	188	2	3.0	9.00
FI22840150	150	300	250	26	8	M24	168.3	28	75	12	192	10	4.5	218	2	3.0	11.50
FI22840200	200	375	320	30	12	M27	219.1	34	88	16	244	10	6.3	285	2	3.0	21.00
FI22840250	250	450	385	33	12	M30	273.0	38	105	18	306	12	7.1	345	2	3.0	34.00
FI22840300	300	515	450	33	16	M30	323.9	42	115	18	362	12	8.0	410	2	3.0	47.50
FI22840350	350	580	510	36	16	M33	355.6	46	125	20	408	12	8.8	465	2	3.5	68.10
FI22840400	400	660	585	39	16	M36	406.4	50	135	20	462	12	11.0	535	2	3.5	96.50
FI22840450	450	685	610	39	20	M36	457.0	57	135	20	500	12	12.5	560	2	3.5	105.00
FI22840500	500	755	670	42	20	M39	508.0	57	140	20	562	12	14.2	615	2	3.5	130.50
FI22840600	600	890	795	48	20	M45	610.0	72	150	20	666	12	16.0	735	2	3.5	211.50

Завод металлоконструкций - https://www.center-mts.ru

FLANGE A COLLARE PN 63

EN 1092-1 : 2013

WELD-NECK FLANGES PN 63

TYPE 11/B2 PN 63

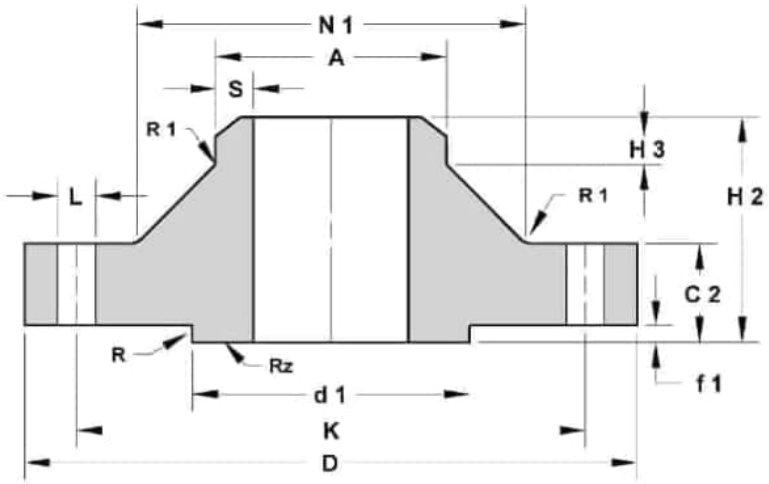

Dimensions in mm.
**Values used unless otherwise specified by purchaser*

Cod.	DN	D	K	FORI / BOLTING			A	C2	H2	H3	N1	R1	S	d1	f1	R	Kg.
				L	N°	SIZE											
FI22850050	50	180	135	22	4	M20	60.3	26	62	10	82	6	2.9	102	2	2.5	4.50
FI22850065	65	205	160	22	8	M20	76.1	26	68	12	98	6	3.2	122	2	2.5	5.50
FI22850080	80	215	170	22	8	M20	88.9	28	72	12	112	8	3.6	138	2	2.5	6.50
FI22850100	100	250	200	26	8	M24	114.3	30	78	12	138	8	4.0	162	2	3	9.50
FI22850125	125	295	240	30	8	M27	139.7	34	88	12	168	8	4.5	188	2	3	14.50
FI22850150	150	345	280	33	8	M30	168.3	36	95	12	202	10	5.6	218	2	3	21.50
FI22850200	200	415	345	36	12	M33	219.1	42	110	16	256	10	7.1	285	2	3	34.00
FI22850250	250	470	400	36	12	M33	273.0	46	125	18	316	12	8.8	345	2	3	48.00
FI22850300	300	530	460	36	16	M33	323.9	52	140	18	372	12	11.0	410	2	3	67.50
FI22850350	350	600	525	39	16	M36	355.6	56	150	20	420	12	12.5	465	2	3.5	97.50
FI22850400	400	670	585	42	16	M39	406.4	60	160	20	475	12	14.2	535	2	3.5	129.00
FI22850450	450						457.0										
FI22850500	500	800	705	48	20	M45						12*		615*	2*	3.5*	
FI22850600	600	930	820	56	20	M52						15*		735*	2*	3.5*	

Завод металлоконструкций - https://www.center-mts.ru

FLANGE A COLLARE PN 100

EN 1092-1 : 2013

WELD-NECK FLANGES PN 100

TYPE 11/B2 PN 100

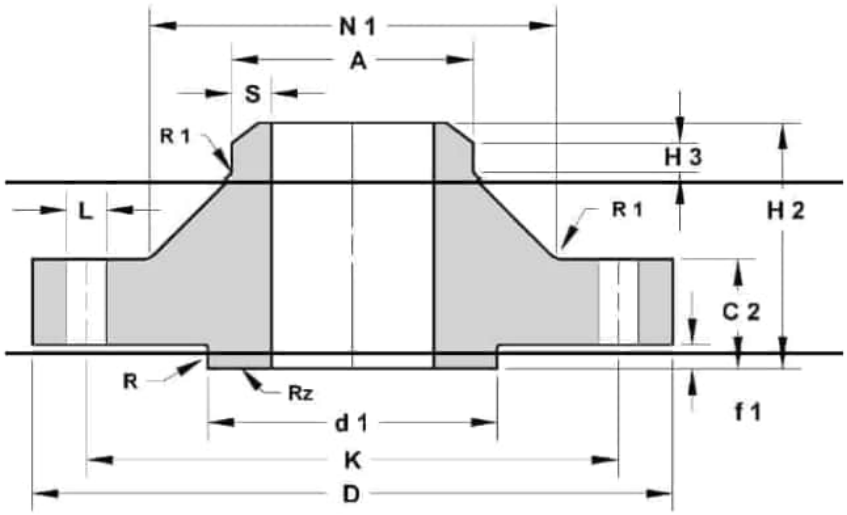

Dimensions in mm.

Cod.	DN	D	K	FORI / BOLTING			A	C2	H2	H3	N1	R1	S	d1	f1	R	Kg.
				L	N°	SIZE											
FI22860010	10	100	70	14	4	M12	17.2	20	45	6	32	4	2.0	40	2	2.5	1.00
FI22860015	15	105	75	14	4	M12	21.3	20	45	6	34	4	2.0	45	2	2.5	1.00
FI22860020	20	130	90	18	4	M16	26.9	22	48	8	42	4	2.6	58	2	2.5	2.00
FI22860025	25	140	100	18	4	M16	33.7	24	58	8	52	4	2.6	68	2	2.5	2.50
FI22860032	32	155	110	22	4	M20	42.4	24	60	8	62	6	2.9	78	2	2.5	3.00
FI22860040	40	170	125	22	4	M20	48.3	26	62	10	70	6	2.9	88	2	2.5	4.00
FI22860050	50	195	145	26	4	M24	60.3	28	68	10	90	6	3.2	102	2	2.5	6.00
FI22860065	65	220	170	26	8	M24	76.1	30	76	12	108	6	3.6	122	2	2.5	7.50
FI22860080	80	230	180	26	8	M24	88.9	32	78	12	120	8	4.0	138	2	2.5	9.00
FI22860100	100	265	210	30	8	M27	114.3	36	90	12	150	8	5.0	162	2	3	13.00
FI22860125	125	315	250	33	8	M30	139.7	40	105	12	180	8	6.3	188	2	3	21.00
FI22860150	150	355	290	33	12	M30	168.3	44	115	12	210	10	7.1	218	2	3	28.00
FI22860200	200	430	360	36	12	M33	219.1	52	130	16	278	10	10.0	285	2	3	50.00
FI22860250	250	505	430	39	12	M36	273.0	60	157	18	340	12	12.5	345	2	3	81.00
FI22860300	300	585	500	42	16	M39	323.9	68	170	18	400	12	14.2	410	2	3	117.97
FI22860350	350	655	560	48	16	M45	355.6	74	189	20	460	12	16.0	465	2	3.5	167.25
FI22860400	400	715	620	48	16	M45	406.4							535	2	3.5	
FI22860450	450						457.0										
FI22860500	500	870	760	56	20	M52	508.0							615	2	3.5	

Завод металлоконструкций - https://www.center-mts.ru

FLANGE FILETTATE PN 6

EN 1092-1 : 2013

HUBBED THREADED FLANGES PN 6

TYPE 13/A PN 6

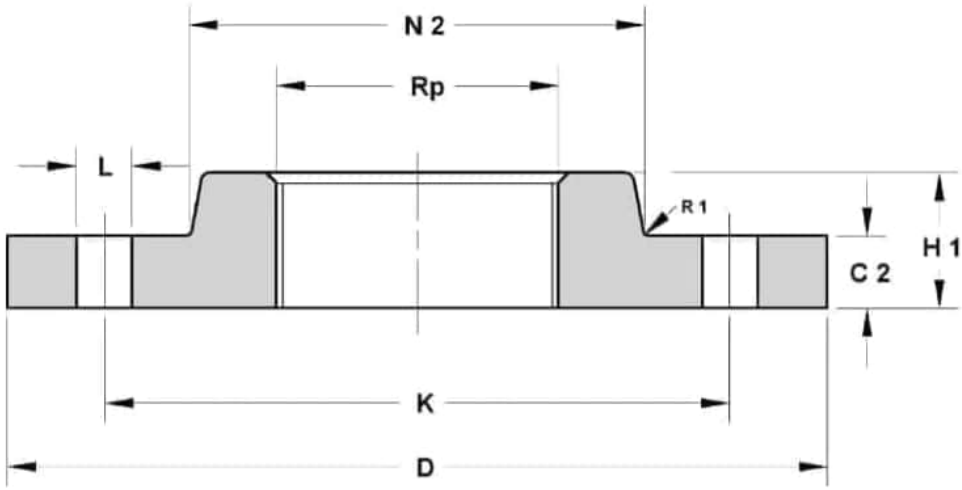

Dimensions in mm.

Cod.	DN	Rp	D	K	FORI / BOLTING			C2	H1	N2	R1	Kg.
					L	N°	SIZE					
FI22530010	10	3/8	75	50	11	4	M10	12	20	25	4	0.39
FI22530015	15	1/2	80	55	11	4	M10	12	20	30	4	0.43
FI22530020	20	3/4	90	65	11	4	M10	14	24	40	4	0.66
FI22530025	25	1"	100	75	11	4	M10	14	24	50	4	0.82
FI22530032	32	1"1/4	120	90	14	4	M12	14	26	60	6	1.17
FI22530040	40	1"1/2	130	100	14	4	M12	14	26	70	6	1.40
FI22530050	50	2"	140	110	14	4	M12	14	28	80	6	1.59
FI22530065	65	2"1/2	160	130	14	4	M12	14	32	100	6	2.17
FI22530080	80	3"	190	150	18	4	M16	16	34	110	8	3.20
FI22530100	100	4"	210	170	18	4	M16	16	40	130	8	3.59
FI22530125	125	5"	240	200	18	8	M16	18	44	160	8	4.94
FI22530150	150	6"	265	225	18	8	M16	18	44	185	10	5.83

Завод металлоконструкций - https://www.center-mts.ru

FLANGE FILETTATE PN 16

EN 1092-1 : 2013

HUBBED THREADED FLANGES PN 16

TYPE 13/A PN 16

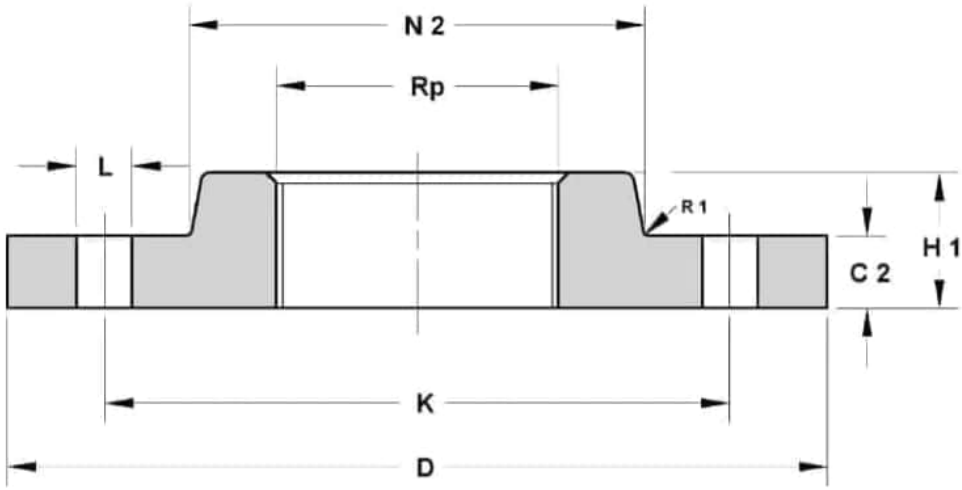

Dimensions in mm.

Cod.	DN	Rp	D	K	FORI / BOLTING			C2	H1	N2	R1	Kg.
					L	N°	SIZE					
FI22540050	50	2"	165	125	18	4	M16	18	28	84	6	2.43
FI22540065	65	2"1/2	185	145	18	4	M16	18	32	104	6	3.18
FU22540065	65	2"1/2	185	145	18	8	M16	18	32	104	6	3.18
FI22540080	80	3"	200	160	18	8	M16	20	34	118	6	4.12
FI22540100	100	4"	220	180	18	8	M16	20	40	140	8	4.47
FI22540125	125	5"	250	210	18	8	M16	22	44	168	8	6.63
FI22540150	150	6"	285	240	22	8	M20	22	44	195	10	8.49

Завод металлоконструкций - https://www.center-mts.ru

FLANGE FILETTATE PN 40

EN 1092-1 : 2013

HUBBED THREADED FLANGES PN 40

TYPE 13/A PN 40

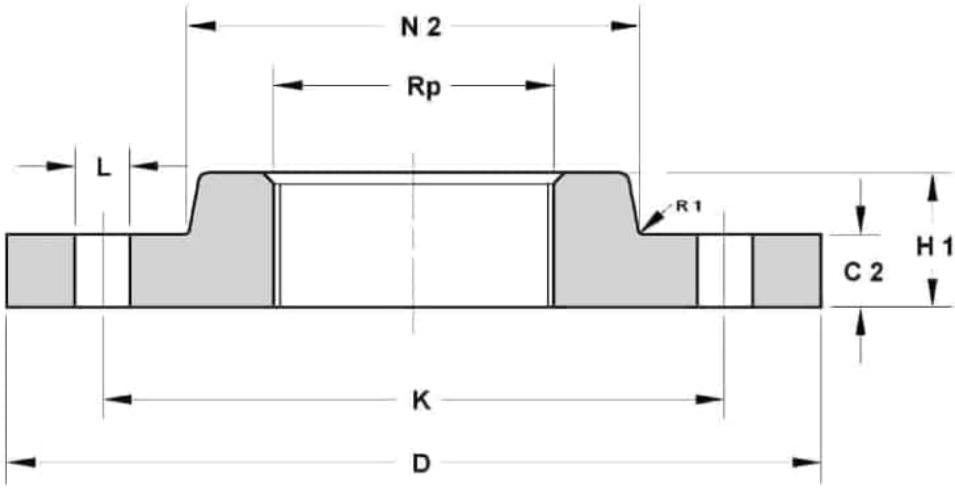

Dimensions in mm.

Cod.	DN	Rp	D	K	FORI / BOLTING			C2	H1	N2	R1	Kg.
					L	N°	SIZE					
FI22550010	10	3/8	90	60	14	4	M12	16	22	30	4	0.72
FI22550015	15	1/2	95	65	14	4	M12	16	22	35	4	0.80
FI22550020	20	3/4	105	75	14	4	M12	18	26	45	4	1.13
FI22550025	25	1"	115	85	14	4	M12	18	28	52	4	1.37
FI22550032	32	1"1/4	140	100	18	4	M16	18	30	60	6	1.99
FI22550040	40	1"1/2	150	110	18	4	M16	18	32	70	6	2.35
FI22550050	50	2"	165	125	18	4	M16	20	34	84	6	3.11
FI22550065	65	2"1/2	185	145	18	8	M16	22	38	104	6	4.10
FI22550080	80	3"	200	160	18	8	M16	24	40	118	8	5.06
FI22550100	100	4"	235	190	22	8	M20	24	44	145	8	6.81
FI22550125	125	5"	270	220	26	8	M24	26	48	170	8	9.25
FI22550150	150	6"	300	250	26	8	M24	28	52	200	10	12.10

Завод металлоконструкций - https://www.center-mts.ru

APPENDICE INFORMATIVA

ACCIAI AL CARBONIO
CARBON STEEL

EN 10027-1 ECISS IC 10	EN 10027 - 2	EN 10025 1990	Germania	Francia	Regno Unito	Spagna	Italia	Belgio	Austria
S185	**1.0035**	Fe310-0	St 33	A 33	-	A 310-0	Fe 320	A 320	St320
S235JR	**1.0037**	Fe 360 B	St 37-2	E 24-2			Fe 360 B	AE 235-B	
S235JRG1	**1.0036**	Fe 360 BFU	USt 37-2			AE 235B-FU			Ust 360 B
S235JRG2	**1.0038**	Fe 360 BFN	RSt 37-2		40 B	AE 235B-FN			RSt 360 B
S235J0	**1.0114**	Fe 360 C	St 37-3 U	E 24-3	40 C	AE 235 C	Fe 360 C	AE 235-C	St 360 C St 360 CE
S235J2G3	**1.0116**	Fe 360 D1	St 37-3 N	E 24-4	40 D	AE 235 D	Fe 360 D	AE 235-D	St 360 D
S235J2G4	**1.0117**	Fe 360 D2	-						
S275JR	**1.0044**	Fe 430 B	St 44-2	E 28-2	43 B	AE 275 B	Fe 430 B	AE 255-B	St 430 B
S275J0	**1.0143**	Fe 430 C	St 44-3 U	E 28-3	43 C	AE 275 C	Fe 430 C	AE 255-C	St 430 C St 430 CE
S275J2G3	**1.0144**	Fe 430 D1	St 44-3 N	E 28-4	43 D	AE 275 D	Fe 430 D	AE 255-D	St 430 D
S275J2G4	**1.0145**	Fe 430 D2	-						
S355JR	**1.0045**	Fe 510 B	-	E 36-2	50 B	AE 355 B	Fe 510 B	AE 355-B	
S355J0	**1.0553**	Fe 510 C	St 52-3 U	E 36-3	50 C	AE 355 C	Fe 510 C	AE 355-C	St 510 C
S355J2G3	**1.0570**	Fe 510 D1	St 52-3 N		50 D	AE 355 D	Fe 510 D	AE 355-D	St 510 D
S355J2G4	**1.0577**	Fe 510 D2	-						
S355K2G3	**1.0595**	Fe 510 DD1	-	E 36-4	50 DD			AE 355-DD	
S355K2G4	**1.0596**	Fe 510 DD2	-						
E295	**1.0050**	Fe 490-2	St 50-2	A 50-2		A 490	Fe 490	A 490-2	St 490
E335	**1.0060**	Fe 590-2	St 60-2	A 60-2		A 590	Fe 590	A 590-2	St 590
E360	**1.0070**	Fe 690-2	St 70-2	A 70-3		A 690	Fe 690	A 690-2	St 690

DESIGNAZIONE EN 10273-2000	EN 10027 - 2	Germania
P250 GH	**1.0460**	C 22.8
P265GH	**1.0425**	St 35.8.I HII

Завод металлоконструкций - https://www.center-mts.ru

TOLLERANZE

EN 1092-1

TOLERANCES

DIMENSIONE DIMENSION	TIPO FLANGIA FLANGE TYPE	MISURA SIZE	TOLLERANZA TOLLERANCE
Diametro Esterno Collare Outside Diameter of Neck **A**	11 - 21 - 34	≤ DN 125	+3.0 0
		> DN 125 ≤ DN 1200	+ 4.5 0
		> DN 1200	+ 6.0 0
Diametro del Foro Bore Diameter **B1 - B2 - B3**	01 - 02 - 04 - 12 - 32	≤ DN 100	+ 0.5 0
		> DN 100 ≤ DN 400	+ 1.0 0
		> DN 400 ≤ DN 600	+ 1.5 0
		> DN 600	+3.0 0
Diametro Esterno Outside Diameter **D**	21	≤ DN 250	± 4.0
		> DN 250 ≤ DN 500	± 5.0
		> DN 500 ≤ DN 800	± 6.0
		> DN 800 ≤ DN 1200	± 7.0
		> DN 1200 ≤ 1600	± 8.0
		> DN 1600 ≤ DN 2000	± 10.0
		> DN 2000	± 12.0
	All Other types	≤ DN 150	± 2.0
		> DN 150 ≤ DN 500	± 3.0
		> DN 500 ≤ DN 1200	± 5.0
		> DN 1200 ≤ DN 1800	± 7.0
		> DN 1800	± 10.0
Altezza al Collare Lenght Through Hub **H1 - H2 - H3**	11 - 12 - 13	≤ DN 80	± 1.5
		> DN 80 ≤ DN 250	± 2.0
		> DN 250	± 3.0
Diametro del Collare Neck Diameter **N1 - N2 - N3**	11 - 21 - 34	≤ DN 50	0 - 2.0
		> DN 50 ≤ DN 150	0 - 4.0
		> DN 150 ≤ DN 300	0 - 6.0
		> DN 300 ≤ DN 600	0 - 8.0
		> DN 600 ≤ DN 1200	0 - 10.0
	12 - 13	≤ DN 50	+ 1.0 0
		> DN 50 ≤ DN 150	+ 2.0 0
		> DN 150 ≤ DN 300	+ 4.0 0
		> DN 300 ≤ DN 600	+ 8.0 0
		> DN 600 ≤ DN 1200	+ 12.0 0
		> DN 1200 ≤ DN 1800	+ 16.0 0
		> DN 1800	+ 20.0 0

Завод металлоконструкций - https://www.center-mts.ru

TOLLERANZE

TOLERANCES

EN 1092-1

Dmensions are in mm.

* Values not specified in EN 1092-1.
Tolerances listed are values required by "Biagini Piero & C. S.r.l."

DIMENSIONE DIMENSION	TIPO FLANGIA FLANGE TYPE	MISURA SIZE	TOLLERANZA TOLLERANCE
Spessore Flangia Flange Thickness **C1 - C2 - C3 - C4**	Tutti i Tipi (Lavorate su tutte le facce) All Type (Machined on both faces)	≤ 18 mm. Thickness / Spessore > 18 mm. ≤ 50 mm. Thickness / Spessore > 50 mm. Thickness / Spessore	± 1.0 ± 1.5 ± 2.0
	Tutti i Tipi (Lavorata solo faccia di contatto) All Types (machined on Front face only) Tipo 02 - 04 non lavorate Type 02 - 04 unmachined	≤ 18 mm. Thickness / Spessore > 18 mm. ≤ 50 mm. Thickness / Spessore > 50 mm. Thickness / Spessore	+ 2.0 - 1.3 + 4.0 - 1.5 + 7.0 - 2.0
Diametro del Risalto Facing Diameter **D1**	Tutti i Tipi All Types	≤ DN 250 > DN 250	+ 2.0 - 1.0 + 3.0 - 1.0
Altezza del Risalto Facing Heght **f 1**	Tutti i Tipi All Types (B - D - F - G)	2 mm.	0 - 1.0
Altezza del Risalto Facing Heght **f 2**	Tutti i Tipi All Types (C - E - G)	Tutti i DN All DN	+ 0.5 0
Altezza del Risalto Facing Heght **f 3**	Tutti i Tipi All Types (D - F) Tutti i Tipi All Types (H)	Tutti i DN All DN Tutti i DN All DN	+ 0.5 0 + 0.2 0
Altezza del Risalto Facing Heght **f 4**	Tutti i Tipi All Types (H)	Tutti i DN All DN	+ 0.5 0
Facing **W**	Tutti i Tipi All Types	Tutti i DN All DN	+ 0.5 0
Facing **X**			0 - 0.5
Facing **Y**			+ 0.5 0
Facing **Z**			0 -0.5
Diametro Mezzeria Diameter of Bolt Circle **K**	Tutti i Tipi All Types	Bullone / Bolt Sizes M10 - M24	± 1.0
		Bullone / Bolt Sizes M27 - M45	± 1.5
Diametro Fori bulloni * Diameter of Bolt holes **L**	Tutti i Tipi All Types	Tutti i DN All DN	± 0.3
Distanza tra i Centri dei Fori Centre to Centre of adjacent bolt holes	Tutti i Tipi All Types	Bullone / Bolt Sizes M10 - M24	± 1.0
		Bullone / Bolt Sizes M27 - M45	± 1.5
Eccentricità Diametro faccia lavorata Eccentricity of machined facing Diameter	Tutti i Tipi All Types	≤ DN 100	1.0
		> DN 100	2.0
Parallelismo tra le faccie Parallelism between bolting bearing surfaces and Flanges Jointing faces	Tutti i Tipi (facce lavorate) All Types (machined bearing surfaces)	Tutti i DN All DN	1°
	Tutti i Tipi (facce non lavorate) All Types (unmachined bearing surfaces)		2°

Завод металлоконструкций - https://www.center-mts.ru

FLANGE A COLLARE

WELD-NECK FLANGES

EN 1092-1

TYPE 11

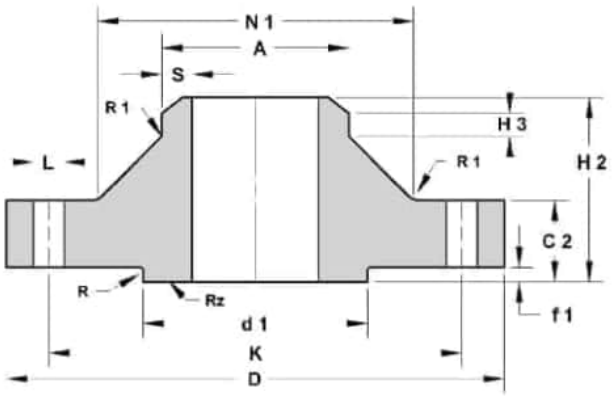

DIAMETRO FORO CENTRALE
BORE DIAMETER

Dimensions are in mm.

Bore diameter = A-2S

DN	A	PN 6	PN 10	PN 16	PN 25	PN40	PN 63	PN 100
10	17.2	13.60				13.60		13.60
15	21.3	17.30				17.30		17.30
20	26.9	22.30				22.30		21.70
25	33.7	28.50				28.50		28.50
32	42.4	37.20				37.20		36.60
40	48.3	43.10				43.10		42.50
50	60.3	54.50		54.50		54.50	54.50	53.90
65	76.1	70.30		70.30		70.30	69.70	68.90
80	88.9	82.50		82.50		82.50	81.70	80.90
100	114.3	107.10		107.10		107.10	106.30	104.30
125	139.7	131.70		131.70		131.70	130.70	127.10
150	168.3	159.30		159.30		159.30	157.10	154.10
200	219.1	206.50	206.50	206.50	206.50	206.50	204.90	199.10
250	273.0	260.40	260.40	260.40	258.80	258.80	255.40	248.00
300	323.9	309.70	309.70	309.70	307.90	307.90	301.90	295.50
350	355.6	341.40	341.40	339.60	339.60	338.00	330.60	323.60
400	406.4	392.20	392.20	390.40	388.80	384.40	378.00	

Завод металлоконструкций - https://www.center-mts.ru

FLANGE A COLLARE

WELD-NECK FLANGES

EN 1092-1

TYPE 11

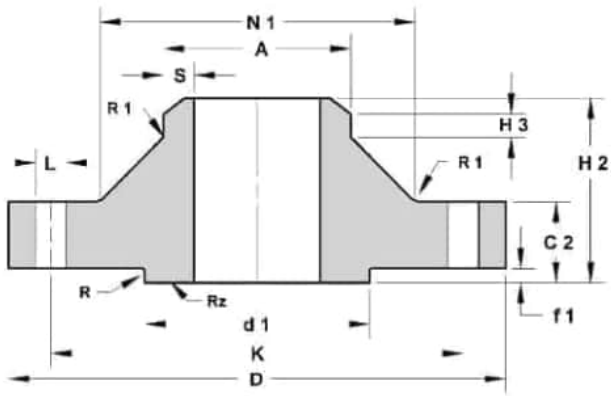

DIAMETRO FORO CENTRALE
BORE DIAMETER

Dimensions are in mm.

Bore diameter = A-2S

DN	A	PN 6	PN 10	PN 16	PN 25	PN40	PN 63	PN 100
450	457.0	442.80	442.80	441.00	439.40	432.00		
500	508.0	493.80	493.80	492.00	488.00	479.60		
600	609.6	595.80	595.80	592.40	588.00	578.00		
700	17.2	696.80	695.00	693.40	686.00			
800	21.3	798.80	797.00	793.00	784.60			
900	26.9	899.80	894.00	894.00	882.00			
1000	33.7	1001.80	996.00	996.00	981.00			

Завод металлоконструкций - https://www.center-mts.ru